PNEUMATIC ACTUATOR SPARE PARTS

AT045U – AT1001U

Spare parts kits for Air Torque actuators

Complete and "O" ring spare parts kits for the Air Torque 4th Generation (Upgrade) AT045U to AT1001U range. Kits replace the wear parts — bearings, plugs and seals — so an actuator can be refurbished in place without replacing the unit.

- Complete kit: bearings, plugs and all "O" rings
- "O" ring kit: seals and plugs only
- M-NBR seals as standard material
- High-grade polymer bearings and guides
- Covers AT045U through to AT1001U

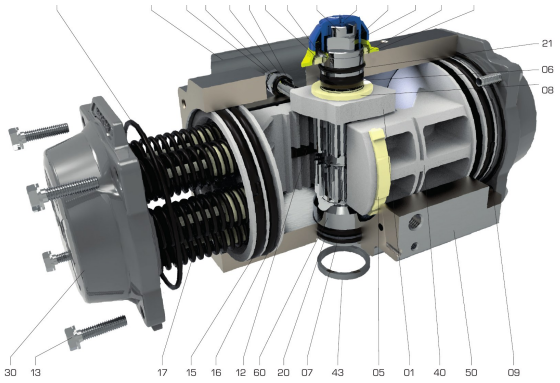

EXPLODED VIEW

4th Gen	12	7	M-NBR
UPGRADE SERIES RANGE	PARTS IN COMPLETE KIT	PARTS IN O-RING KIT	STANDARD SEAL MATERIAL

What each kit contains.

AIR TORQUE PARTS AND MATERIALS

Complete spare parts kit

Bearings	piston back (05), pinion top (06), pinion bottom (07)
Thrust	bearing pinion (08), bearing piston head (15)
Seals	all "O" rings listed in the O-ring kit
Plugs	09 / 09.1

"O" ring spare parts kit

Plugs	09 (09.1 on AT801U–AT1001U)
O-rings	stop screw (11), end cap (14)
O-rings	piston (16)
O-rings	pinion bottom (20), pinion top (21)

Sizes covered

AT045U · AT051U · AT101U … AT1001U

Kits are specific to each actuator size from AT045U to AT1001U. Part 09 plugs are replaced by part 09.1 "O" ring plugs on AT801U and AT1001U, and parts 11 do not apply to AT045U. The full kit contents by part number are listed overleaf.

Quantities are per actuator, as listed in the Air Torque 4th Generation parts and materials table.

Actuator construction.

AT801U PARTS AND MATERIALS

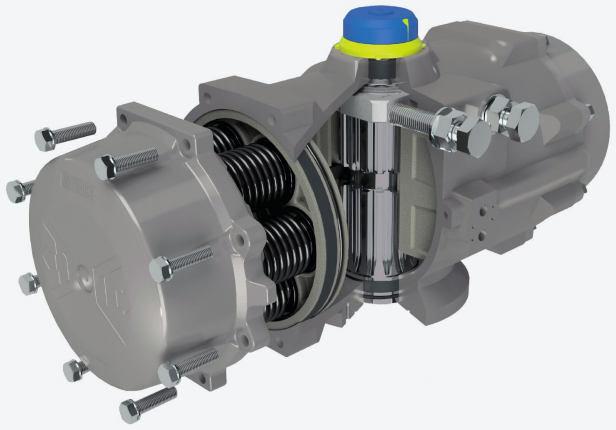

Kit contents.

○ COMPLETE KIT □ O-RING KIT

Part	Description	Material	Qty	Complete	O-ring
05	Bearing (piston back)	High-grade polymers	2 (4 for AT1001U)	○	
06	Bearing (pinion top)	High-grade polymers	1	○	
07	Bearing (pinion bottom)	High-grade polymers	1	○	
08	Thrust bearing (pinion)	High-grade polymers	2 (1 for AT045U)	○	
09	Plug (NA for AT801U–AT1001U)	M-NBR / Silicone	2	○	□
09.1	"O" ring plug (AT801U–AT1001U)	M-NBR / Silicone	2	○	□
11	"O" ring (stop screw), NA for AT045U	M-NBR	2	○	□
14	O-ring (end cap)	M-NBR	2	○	□
15	Bearing (piston head)	High-grade polymers	2	○	
16	"O" ring (piston)	M-NBR	2	○	□
20	"O" ring (pinion bottom)	M-NBR	1	○	□
21	"O" ring (pinion top)	M-NBR	1	○	□

SPRINGS (AT045U–AT051U) AND SPRING CARTRIDGE (AT101U–AT1001U)

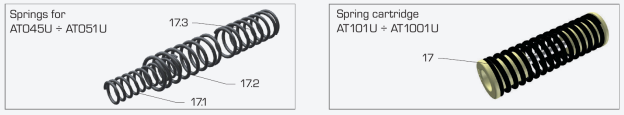

Main parts and materials.

Part	Description	Standard material
01	Octi-cam (stop arrangement), NA for AT045U	Stainless steel (AT051U–AT301U) / carbon steel, zinc coated
02	Stop cap screw	Stainless steel
10	Thrust washer (pinion)	Stainless steel
12	Piston guide	High-grade polymers
13	Cap screw (end cap)	Stainless steel
17	Spring (cartridge), AT101U–AT1001U	SiCr spring alloy steel, coated
18	Spring clip (pinion)	Spring steel, ENP
19	Position indicator	High-grade polymers / stainless steel
30	End cap	Pressure die cast aluminium alloy, anodised and coated
40	Piston	Pressure die cast aluminium alloy, anodised
50	Body	Extruded aluminium alloy, anodised (cast for AT801U and AT1001U)
60	Drive shaft	Carbon steel, ENP
60.1	Integral drive shaft	Stainless steel, ENP
65	Plastic insert	High-grade polymers

Ordering a kit.

Quote the actuator model (for example AT101U) and whether you need the complete spare parts kit or the "O" ring kit. Our UK team can confirm the correct kit from the actuator identification label.

Data supplied by the manufacturer (Air Torque 4th Generation parts and materials) and shown for reference. Please confirm kit contents with Actuation Valve & Control before ordering.

Need a spares kit for an Air Torque actuator?

Talk to our UK team about sizes, seat options and complete actuated packages.

actuation.co.uk